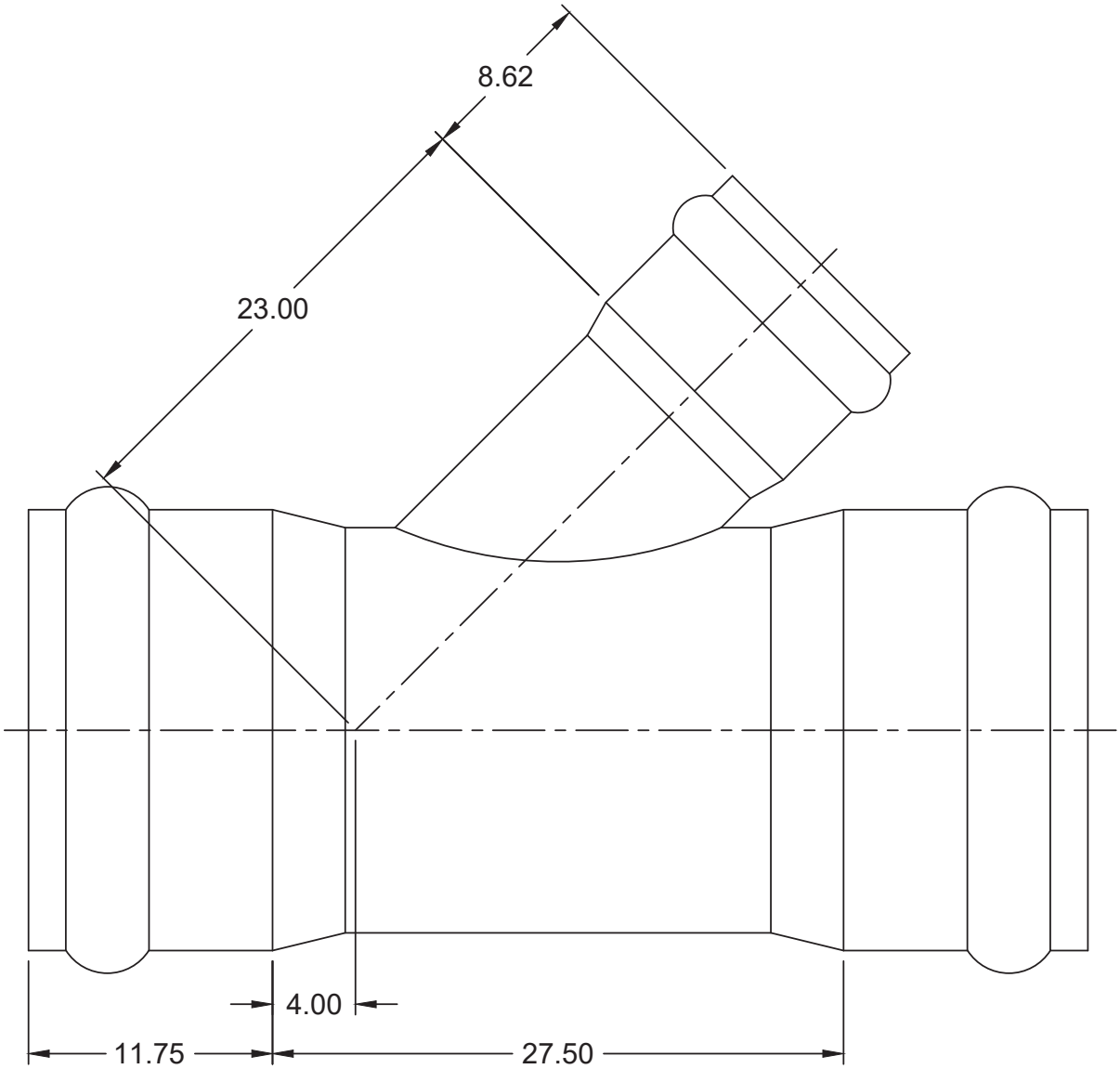

GPK PRODUCTS,INC.

FOR REFERENCE ONLY DIMENSIONS IN INCHES DIMENSIONS SUBJECT TO CHANGE

TITLE

18" x 10" WYE GxGxG
C900 DR 18 NON-PRESSURE PVC

1-800-437-4670 FARGO, ND

DATE	SCALE	PART NO.
6-10-22	NONE	Y07-1810